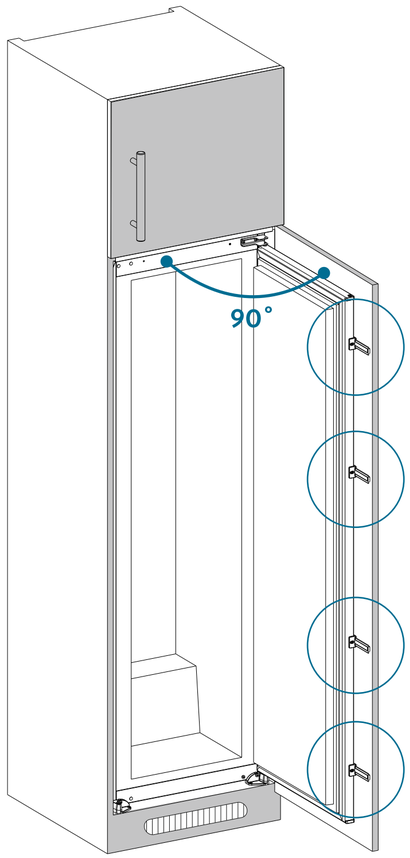

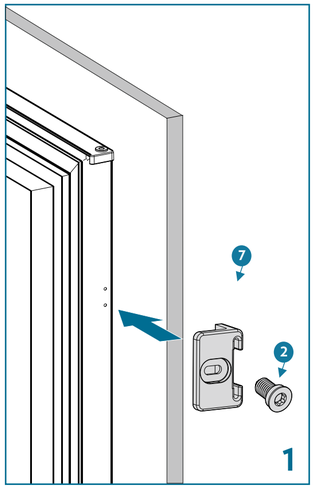

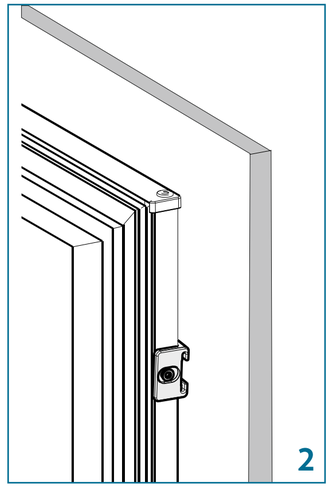

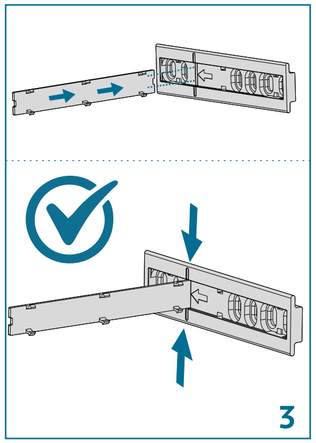

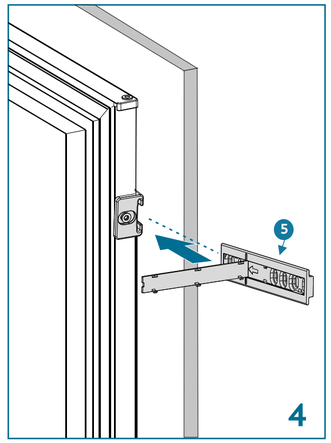

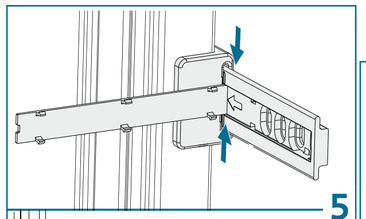

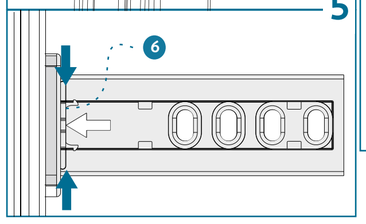

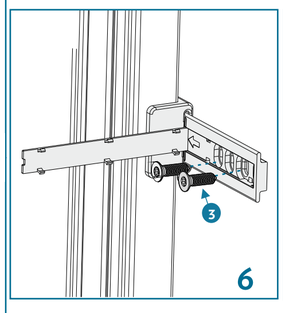

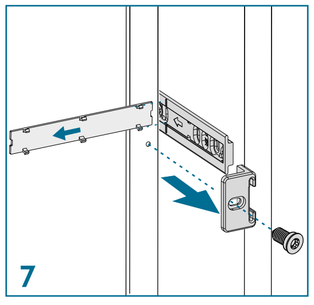

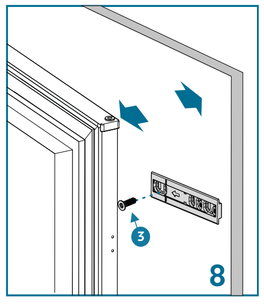

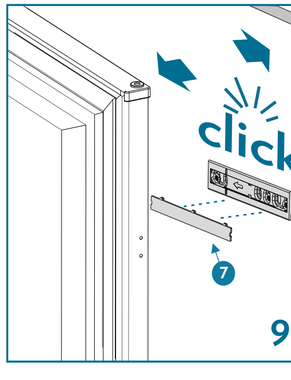

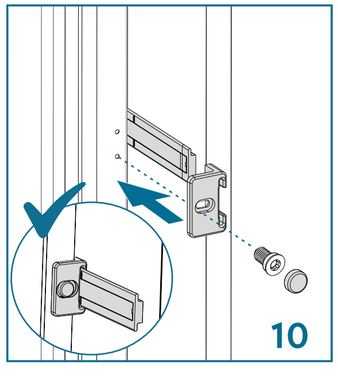

F

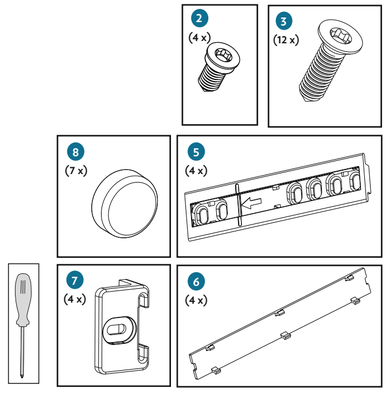

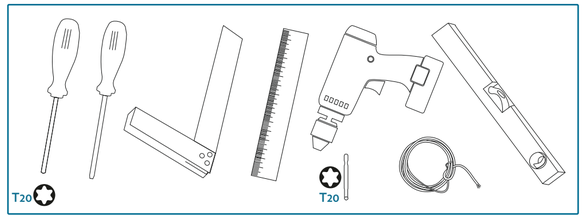

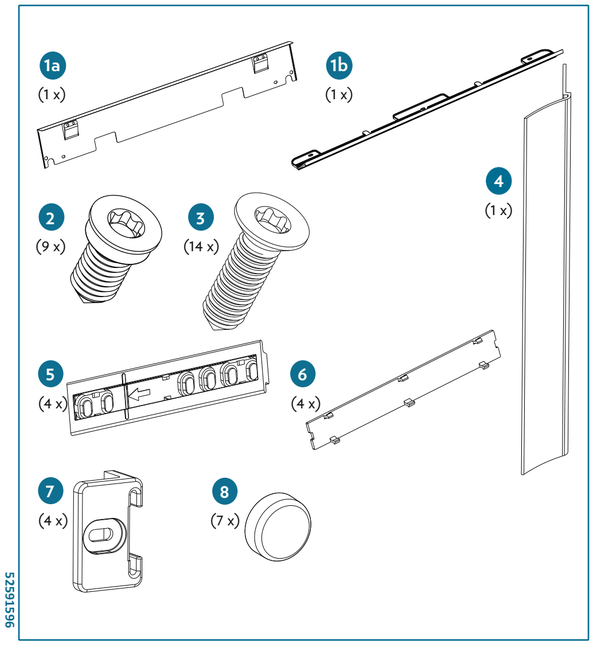

525915.96

	1a	1b
A	1770 (mm)	1770 (mm)
B	1770 - 1778 (mm)	1770 - 1790 (mm)

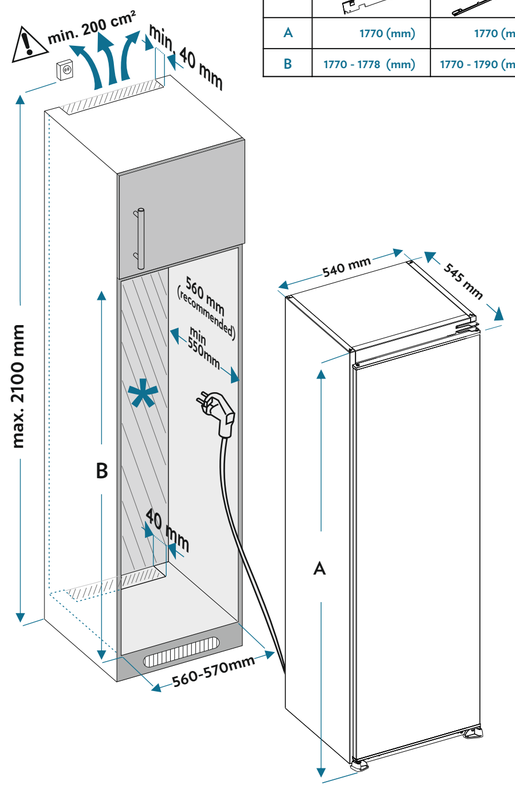

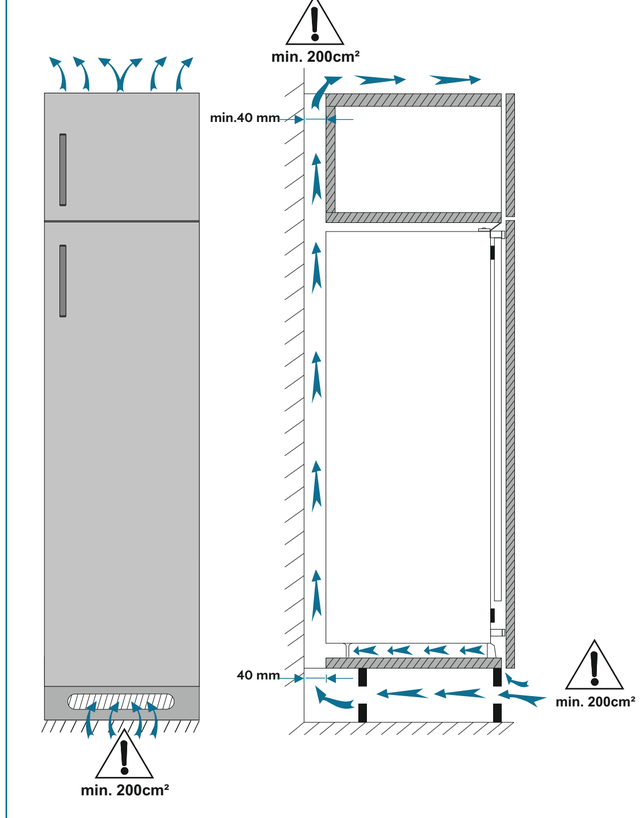

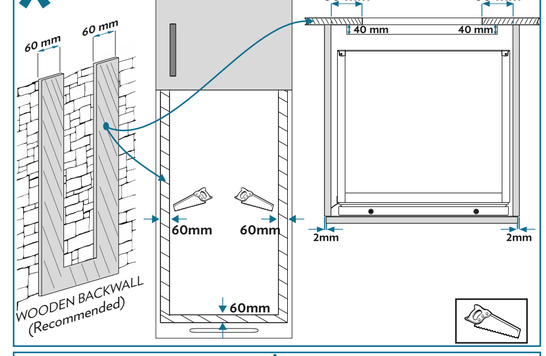

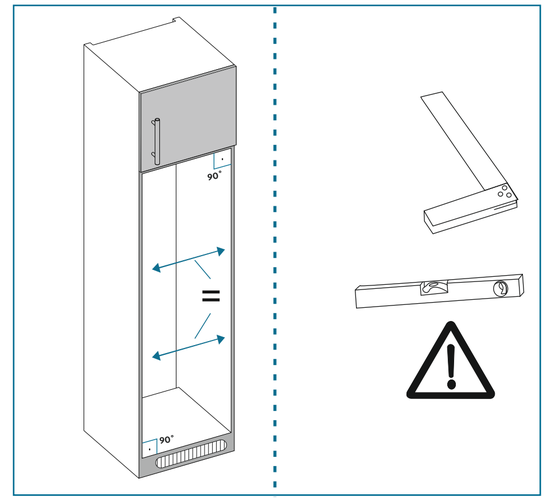

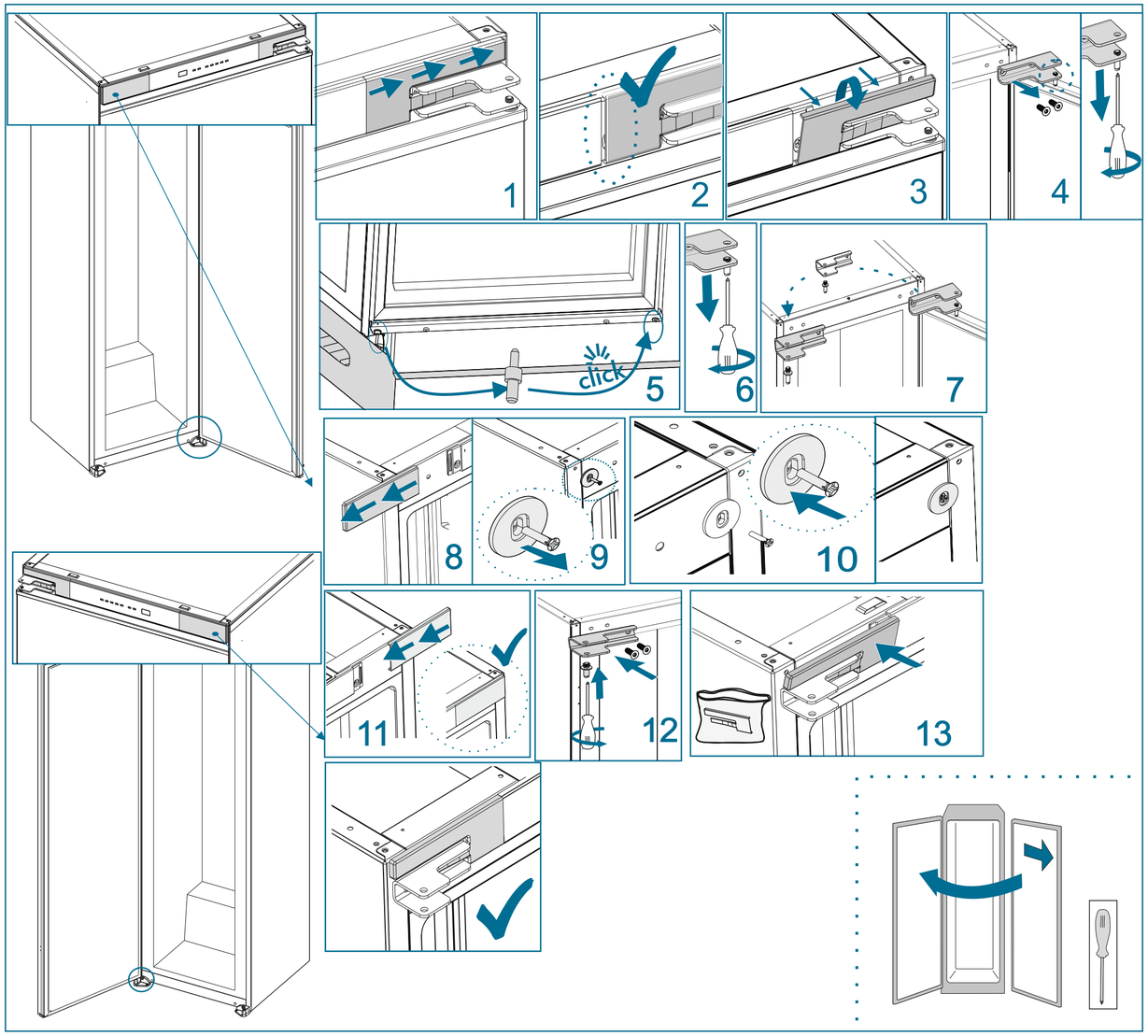
1
2
3
4
click
5
6
7
8
9
10
11
12
13

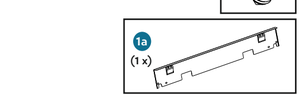

4
1
4
2
1a
2
A
A1
4
(1 x)
2
(2 x)
1a
(1 x)

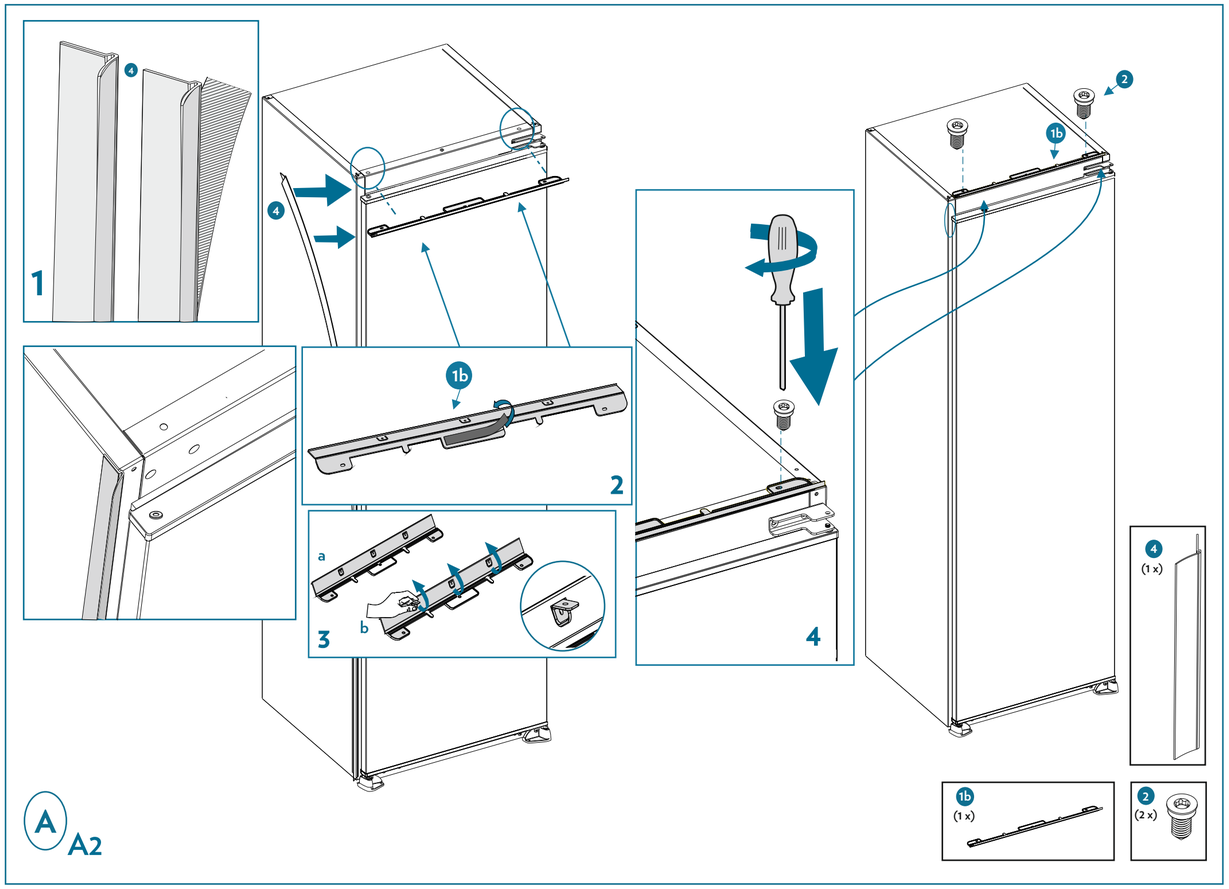
4
1
4
1b
2
a
b
3
4
2
1b
2
A
A2
4
(1 x)
1b
(1 x)
2
(2 x)

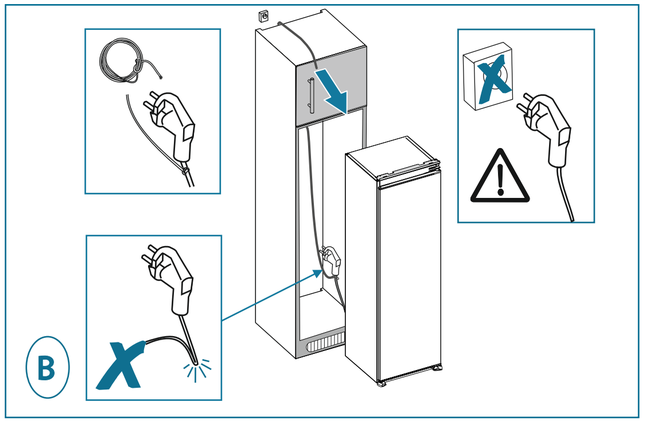
B

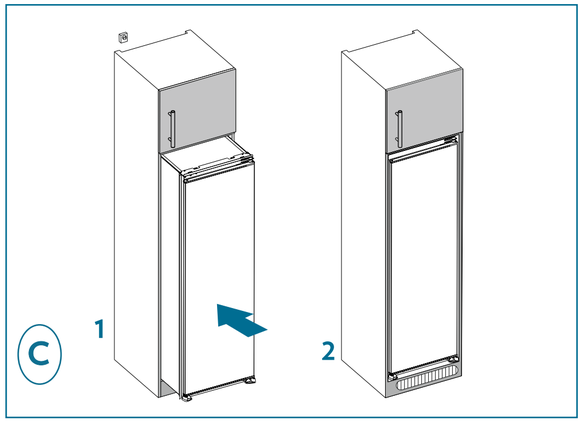
C
1
2

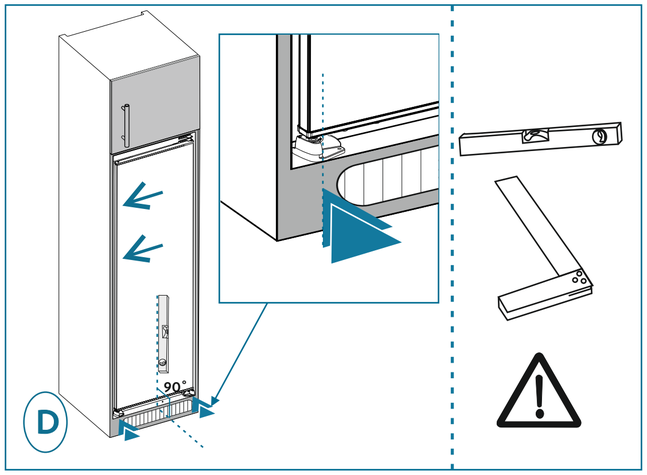
D
90°

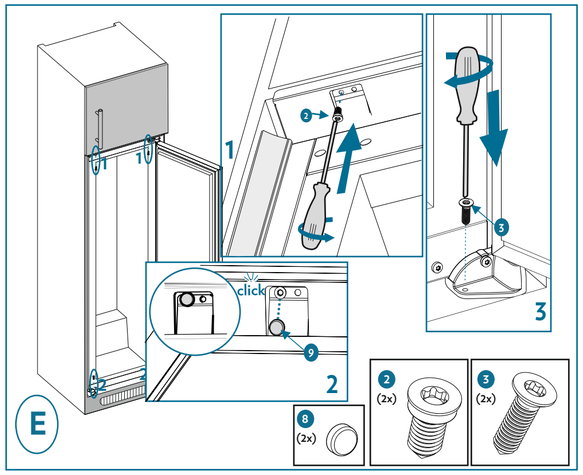
E
1
2
click
3
2
(2x)
3
(2x)
8
(2x)